ILLUSTRATED PARTS

EMBER™
One Handle Lavatory
56910 Series

ORDER BY PART NUMBER

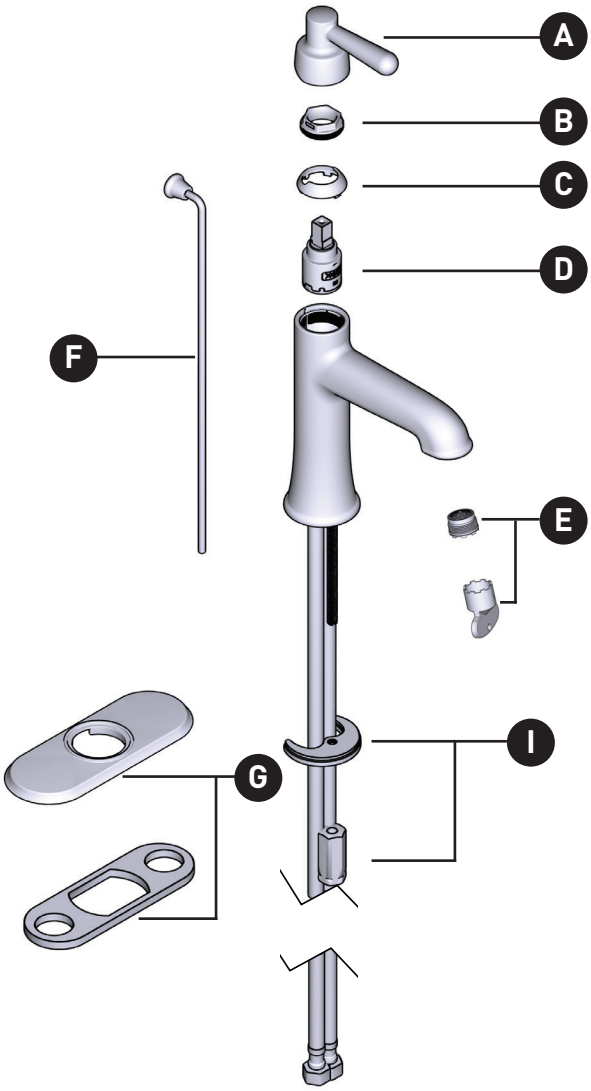

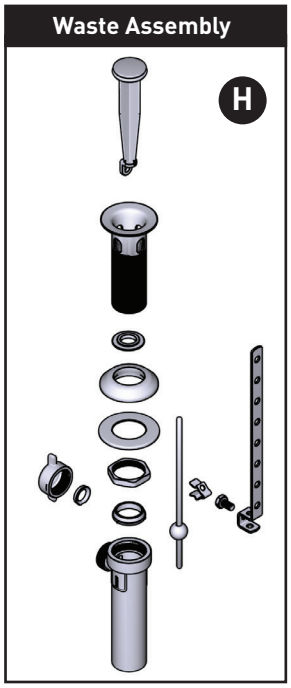

ID	Kit Number	Finish
*A	217587	See below
B	201725	N/A
*C	201724	See below
D	400162	N/A
E	217589	N/A
*F	217588	See below
*G	150568	See below
H	40025	N/A
I	146190	N/A

***Finish Determined by Suffix**

Finish	Description
No Suffix	Chrome
BN	Brushed Nickel
BL	Matte Black